Reg. No. | | | | | | | | | | | [18MTSE243]

SECOND SEMESTER M.TECH EXAMINATION, JUNE 2019

DESIGN OF INDUSTRIAL STEEL STRUCTURES

Time: 03 Hours **Maximum Marks: 100**

Instructions: i. **Answer FIVE full questions. Question 1&2 are compulsory.**

ii. **Use of IS 800:2007 is permitted.**

PART - A

1. a. Explain advantages and disadvantages of steel structure over R.C.C. structure. **07**

   b. Explain the bolt assembly with neat sketch. **07**

   c. Explain the types of failures of bolts. **06**

2. a. Two plates 10mm and 18mm thick are to be connected by double cover butt joint. The joint is doubled bolted with cover plates each 8mm thick. The load to be transmitted by the joint is 200kN. Design the joint and bolts on packing. Take M20 black bolt and grade 4.6 plate. **10**

   b. Determine the efficiency of butt joint connected M20 black bolt and grade 4.6 plates.

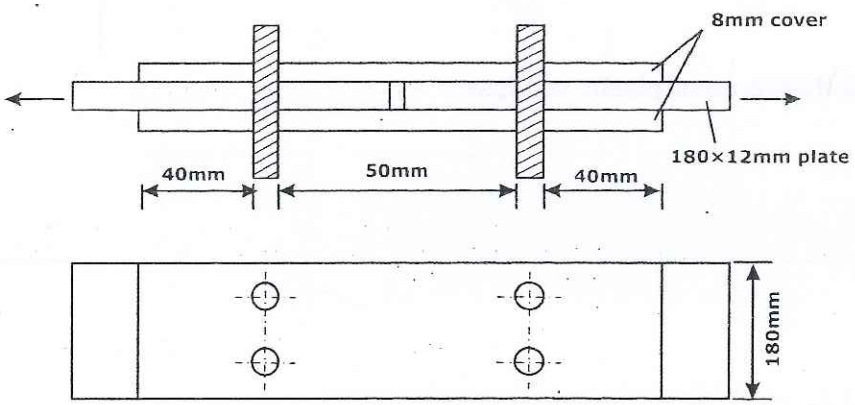

3. a. Design a gusseted base for a column ISHB @ 710 N/m with two plates 450mm × 20mm carrying a factorial load of 3600kN. The column is to be supported on concrete pedestal to be built with M20 concrete. **20**

OR

4. Design a slab base for a column ISHB 300@ 577 N/m carrying an axial factored load of 1000kN. M20 concrete is used for foundation. Provide welded connection between column and base plate. **20**

5. a. Explain the design procedure of gantry girders. **10**

   b. Explain the loading cases in design of gantry girder and explain positioning of moving load for maximum effects. **10**

OR

JAIN (Deemed-to-be University) Learning Resource Centre Jain Global Campus Ramanagar-112

6. Design a simply supported gantry girder to carry an electric overhead travelling crane for given data below: **20**

Span of gantry girder = 6.5m

Span of Crane girder = 16m

Crane capacity = 250kN

Self-weight of crane girder excluding trolley = 50kN

Minimum hook approach = 1.0m

Distance between wheels = 3.5m

Self-weight of rails = 0.3kN/m

7. a. Explain the concept of plastic hinge formation. **10**

b. Determine the plastic section modulus of built-up section-I having web size 300mm ×3mm, flanges size 200mm × 3mm symmetric. **10**

OR

8. a. Determine the collapse load for a continuous beam of uniform cross section. **10**

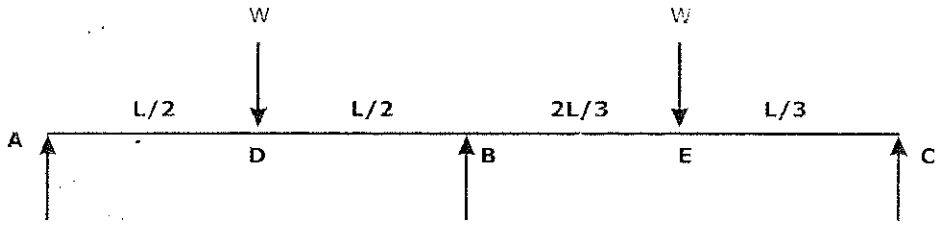

b. Explain the theorems of plastic collapse. **10**